QFN14 2.5×2.5

Land Pattern (103-2525-14)

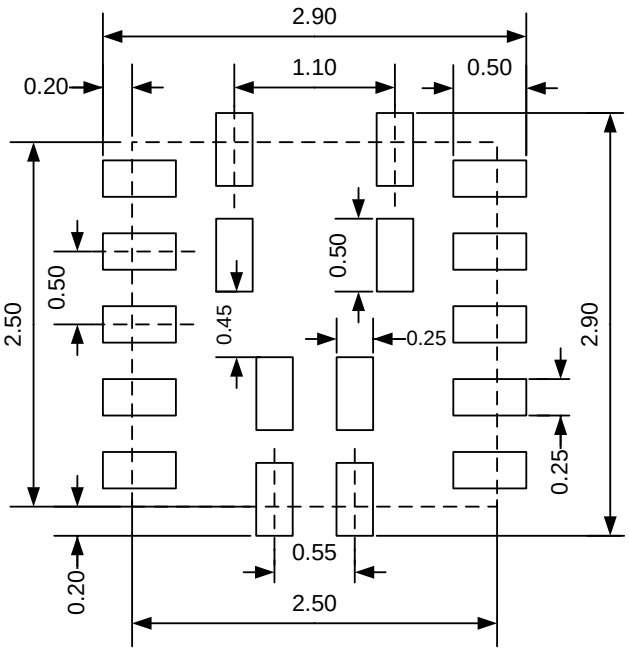

NOTES:
1. Compound dimension: 2.50×2.50.
2. Unit: mm.
3. General tolerance ±0.05mm unless otherwise specified.
4. The layout is just for reference.